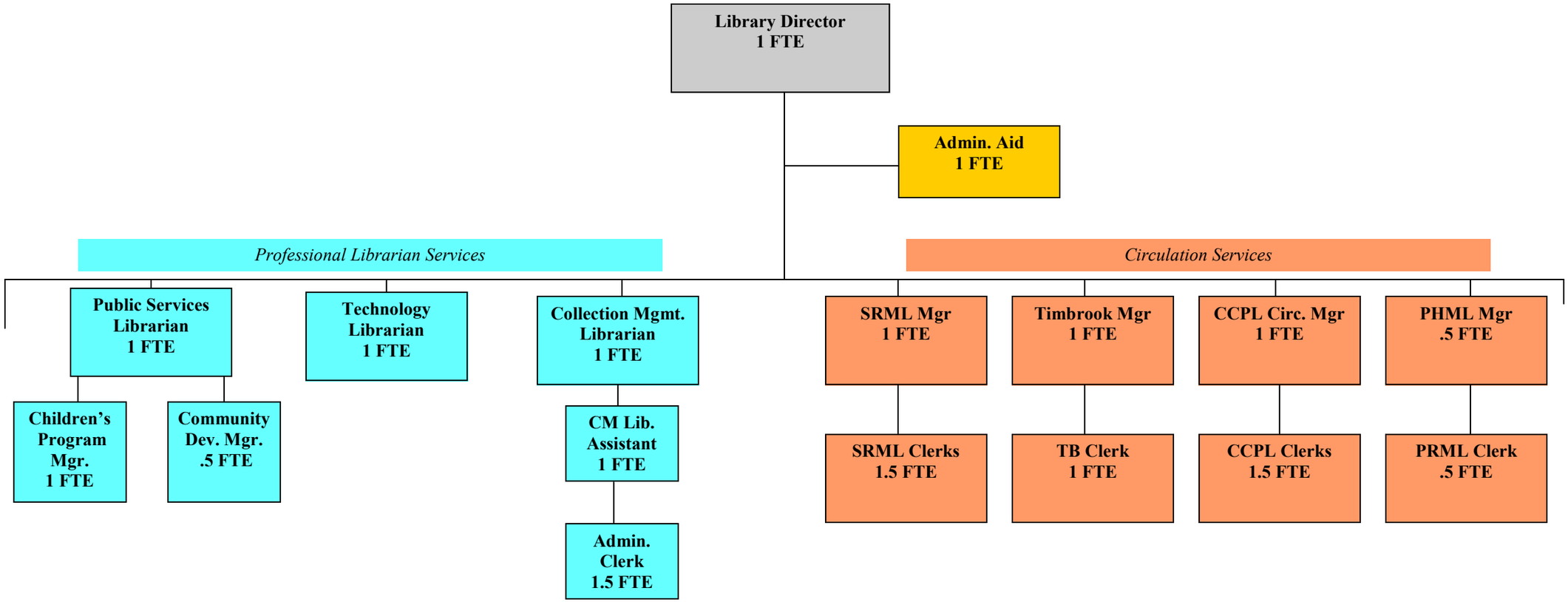Proposed CCPLS Organizational Chart 2010-11